USN | | | | | | | | | | |

# RV COLLEGE OF ENGINEERING®

**(An Autonomous Institution affiliated to VTU)**

**III Semester B. E. Examinations Nov/Dec-19**

## Electronics and Communication Engineering

## ANALOG MICROELECTRONIC CIRCUITS

***Time: 03 Hours*** ***Maximum Marks: 100***

***Instructions to candidates:***

1. Answer all questions from Part A. Part A questions should be answered in first three pages of the answer book only.
2. Answer FIVE full questions from Part B. In Part B question number 2, 7 and 8 are compulsory. Answer any one full question from 3 and 4 & one full question from 5 and 6
3. Assume thermal voltage, $V_T$=26mV at room temperature.

### PART-A

| | | | |
|---|---|---|---|
| 1 | 1.1 | The aspect ratio of a $MOSFET$ is changed by 2 times, while $I_D$ is maintained constant. Determine the change in the transconductance $g_m$. | 01 |
| | 1.2 | A $MOSFET$ carries a drain current on $1\,mA$ with $V_{DS}$= $1V$ in saturation. Determine the change in $I_D$, if $V_{DS}$ rises to $1.55V$ and $\lambda = 0.1V^{-1}$, and the output impedance of the device. | 02 |
| | 1.3 | Calculate the total charge stored in the channel of an $NMOS$ device if $C_{OX} = 10fF/\mu m^2$, $W = 5\mu m$, $L = 0.1\mu m$ , and $V_{GS} - V_T = 1V$. Assume that the $MOS$ device is in deep triode region. | 01 |
| | 1.4 | Determine the values of $R_B$ *and* $R_C$ in the circuit shown in Fig. 1.4. 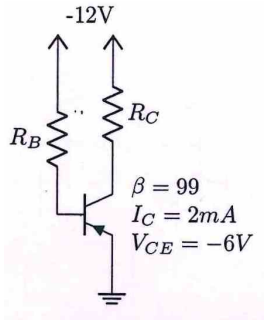  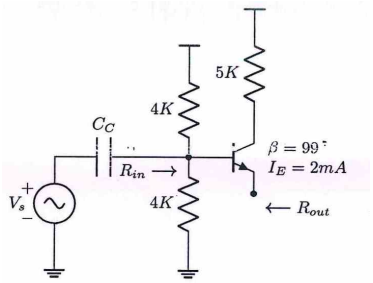  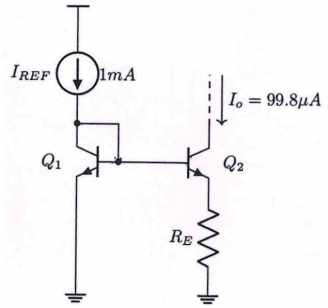  Fig. 1.4 Fig 1.5 Fig 1.6 | 02 |
| | 1.5 | Calculate the input resistance, $R_{in}$ and the output resistance, $R_{out}$ for the circuit shown in Fig. 1.5. Assume, $\lambda = 0$. | 02 |
| | 1.6 | Calculate the value of $R_E$ for the circuit shown in Fig. 1.6. Assume $\beta$ is very large for all the transistors and $V_{BE} = 700mV$ at $1mA$. | 02 |
| | 1.7 | In Fig. 1.7, $I_{EE} = 1.5mA$ and the emitter area, $A_E$, of $M_1$ is twice that of $M_2$. Compute the voltage gain of the circuit. 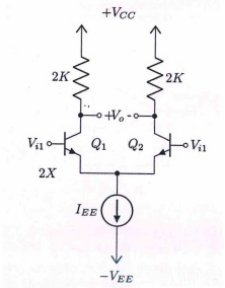  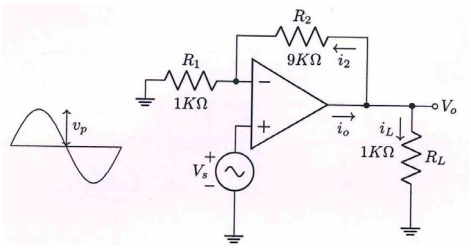  Fig. 1.7 Fig 1.8 | 02 |

| | | |
|---|---|---|
| 1.8 | Consider the amplifier circuit shown in Fig. 1.8. The op amp is specified to have output saturation voltages of $\pm 13V$. Calculate the output current, $i_o$ for an input sinusoidal signal having peak value, $v_p = 1V$. | 02 |
| 1.9 | In an voltage amplifier using op amp, has a unity gain frequency of $5\,MHz$ and slew rate of $31.4V/\mu sec$. Compute the maximum amplitude of a step input, so that the output is purely exponential. | 01 |
| 1.10 | Consider an op-amp with input resistance $R_i = 50k\Omega$ output resistance $= 30k\Omega$ and open-loop gain of 299. Compute the values of input impedance, $R_{if}$ and the output impedance, $R_{of}$, when such an op-amp is configured with unity gain feedback as shown in Fig. 1.10. 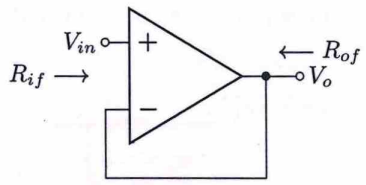  Fig. 1.10 | 02 |
| 1.11 | A power transistor with $T_j(max) = 200°C$ has $\theta_{JA} = 5°C/W$. Calculate the maximum power dissipation for the transistor at an ambient temperature of 50°C. | 02 |
| 1.12 | In a class A series-fed power amplifier, suitably biased with $R_L = 25\Omega$, $R_B = 1K\Omega$ and $V_{cc} = 20V$, Calculate the input power. Assume $\beta = 100$. | 01 |

**PART-B**

| | | |
|---|---|---|
| 2 a | Using a suitable schematic for a common gate amplifier with a resistance at the input, $R_s$ and a load $R_D$, derive the expression for the small signal gain and the input impedance. | 08 |
| b | In $CS$ amplifier circuit of Fig. 2.b, determine input and output $Q$ points, its small-signal voltage gain, its input resistance, and the largest allowable input signal. The $NMOS$ device has $V_T$=1.5V, $K_n' \frac{W}{L} = 0.25mA/V^2$ and $V_A = 50V$. Assume that $C_{C1}$ and $C_{C2}$ are infinite. | |
| | 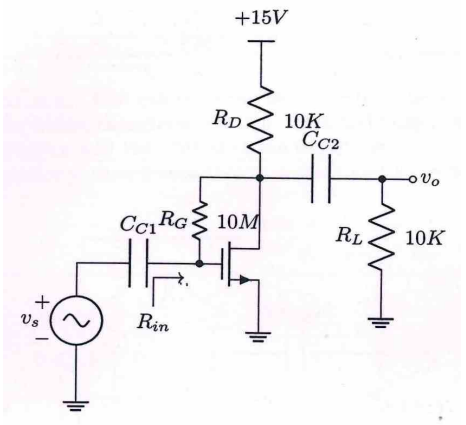  Fig. 2.b | 08 |
| | | |
| 3 | Design the values of $R_C, R_E, R_1$ and $R_2$ in the amplifier circuit of Fig. 3.a, so that the operating point is fixed at $V_{CE} = 6.3V$, $I_C = 2.6mA$, with bias stabilization factor, $S(I_{CO}) = 10$, and the mid frequency small signal voltage gain $v_o/v_s = -125$. Design the values of $C_{C1}, C_{C2}$ and $C_E$ so that the lower cut-off frequency of the amplifier is $100Hz$. (Hint: Choose $C_{C1}$ and $C_{C2}$ so that the lower cut-off frequency because of $C_{C1}$ and $C_{C2}$ are at-least a decade lower than $100Hz$) | 16 |

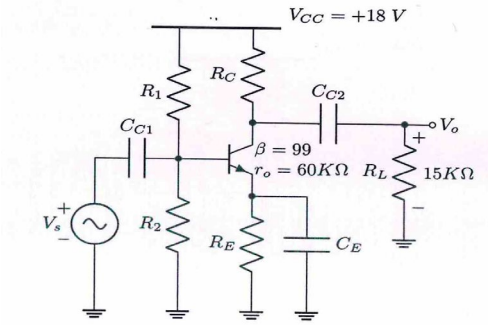


Fig. 3.a

**OR**

4 a In the amplifier circuit of Fig. 4.a, determine the lower cut-off frequencies $f_{LB}, f_{LC}, f_{LE}$ due to $C_B, C_C, C_E$ respectively and the upper cut-off frequencies $f_{Hi}$ and $f_{Ho}$ due to the input and output circuit internal capacitances. Also calculate the bandwidth of the amplifier.

Note: $C_{wi}, C_{wo}$ are the wiring capacitances at the input and output and $C_{cc}$ is the parasitic capacitance between the collector and the emitter of the transistor.

Assume that the transistor is biased such that $r_e = 39\Omega$ and $V_A = \infty$.

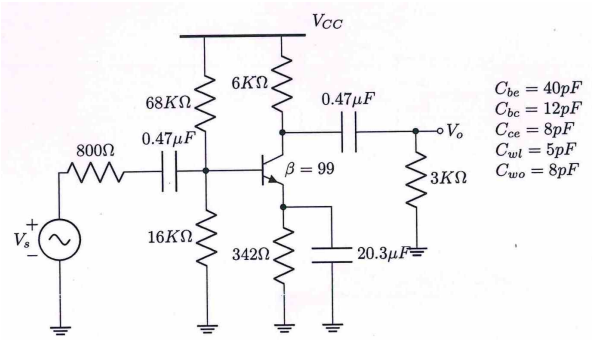


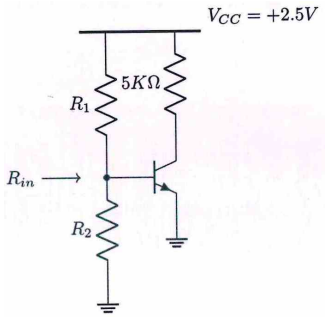


Fig. 4.a Fig. 4.b 12

b The circuit of Fig. 4.b must be designed for an input impedance of $10K\Omega$ and a $g_m$ of at least $1/(260\Omega)$. Assume $\beta = 99$, $V_{BE} = 0.7V$ and $V_A = \infty$. Determine the minimum available values of $R_1$ and $R_2$. 04

5 a Derive an expression for the output impedance of Wilson mirror using $BJTs$. 08

b Design the circuit in Fig. 5.b to obtain a dc voltage of $+0.2V$ at each of the drains $M_1$ and $M_2$ when $V_{G1} = V_{G2} = 0$. Operate all transistors at $V_{OV} = 0.2V$ and assume that for the process technology in which the circuit is fabricated, $V_T = 0.5V$ and $K_n' = 250\mu A/V^2$. Neglect channel-length modulation. Determine the values of $R, R_D, W/L$ ratios of $M_1, M_2, M_3$ and $M_4$. What is the input common-mode voltage range for the design?

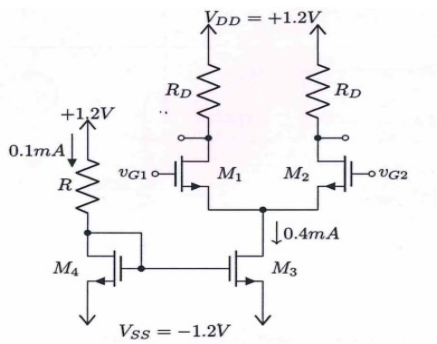


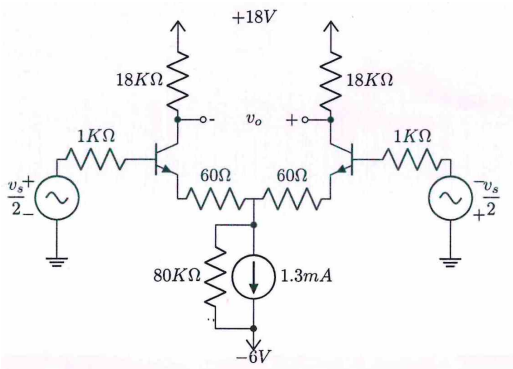


Fig. 5.b Fig. 6.b 08

**OR**

| | | | |
|---|---|---|---|
| 6 | a | Derive an expression for the output impedance of Wilson mirror using $MOSFETs$. | 06 |
| | b | For the differential amplifier shown in Fig. 6.b, find the common input voltage range, the input differential resistance ($R_{id}$), the differential voltage gain ($v_o/v_1$), the common mode input resistance ($R_{icm}$), the common mode gain ($A_{cm}$) and the $CMRR$, if the collector resistances are of 0.5% tolerance. Assume $\beta = 99$, $V_A = 100V$ for the transistors and $V_{CS}(\text{min}) = 1V$ | 10 |
| | | | |
| 7 | a | Design an instrumentation amplifier to realize a differential gain, variable in the range 0.5 to 50, utilizing a $50k$ pot as a variable resistor. | 10 |
| | b | Design a Schmitt trigger using an ideal op-amp, to obtain a $UTP = 4V$ and hysteresis= $3V$. Assume op-amp $V_{SAT} = \pm 12V$ | 06 |
| | | | |
| 8 | a | The op-amp in the circuit shown in Fig. 8.a has an input impedance of $150K\Omega$ and output impedance of $4K\Omega$ and has an open loop gain of 1200. Determine $\frac{v_o}{v_s}$, $R_{in}$ and $R_{out}$ using feedback theory. 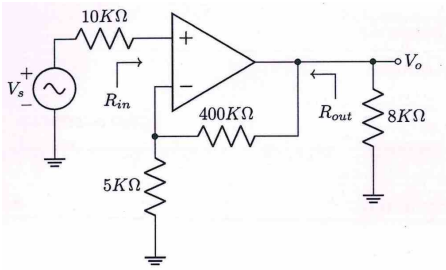  Fig. 8.a | 10 |
| | b | Draw the circuit of a complementary symmetry class $B$ power output stage and show that the maximum conversion efficiency is 78.5%. | 06 |